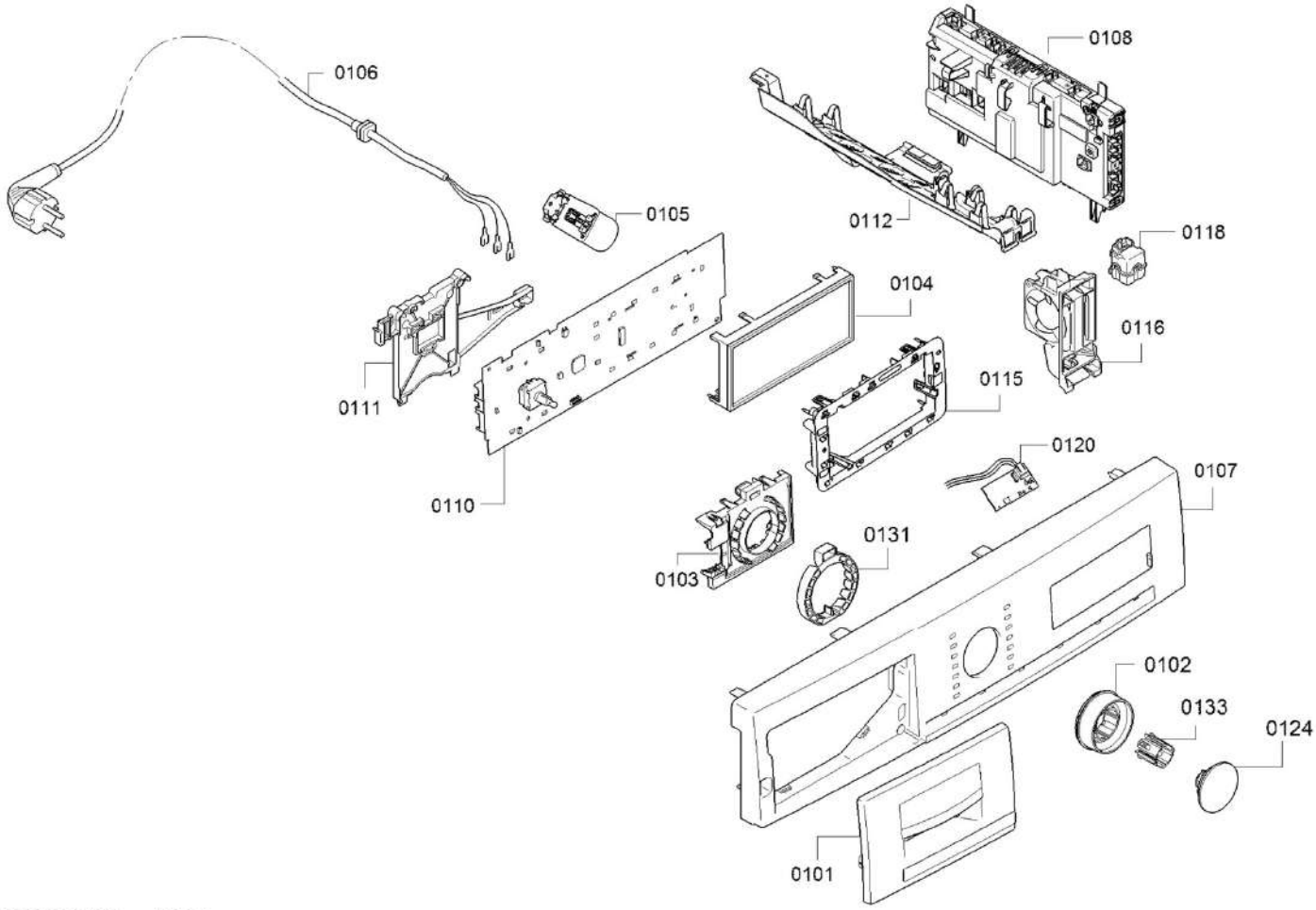

58300000220304 aet 001 b

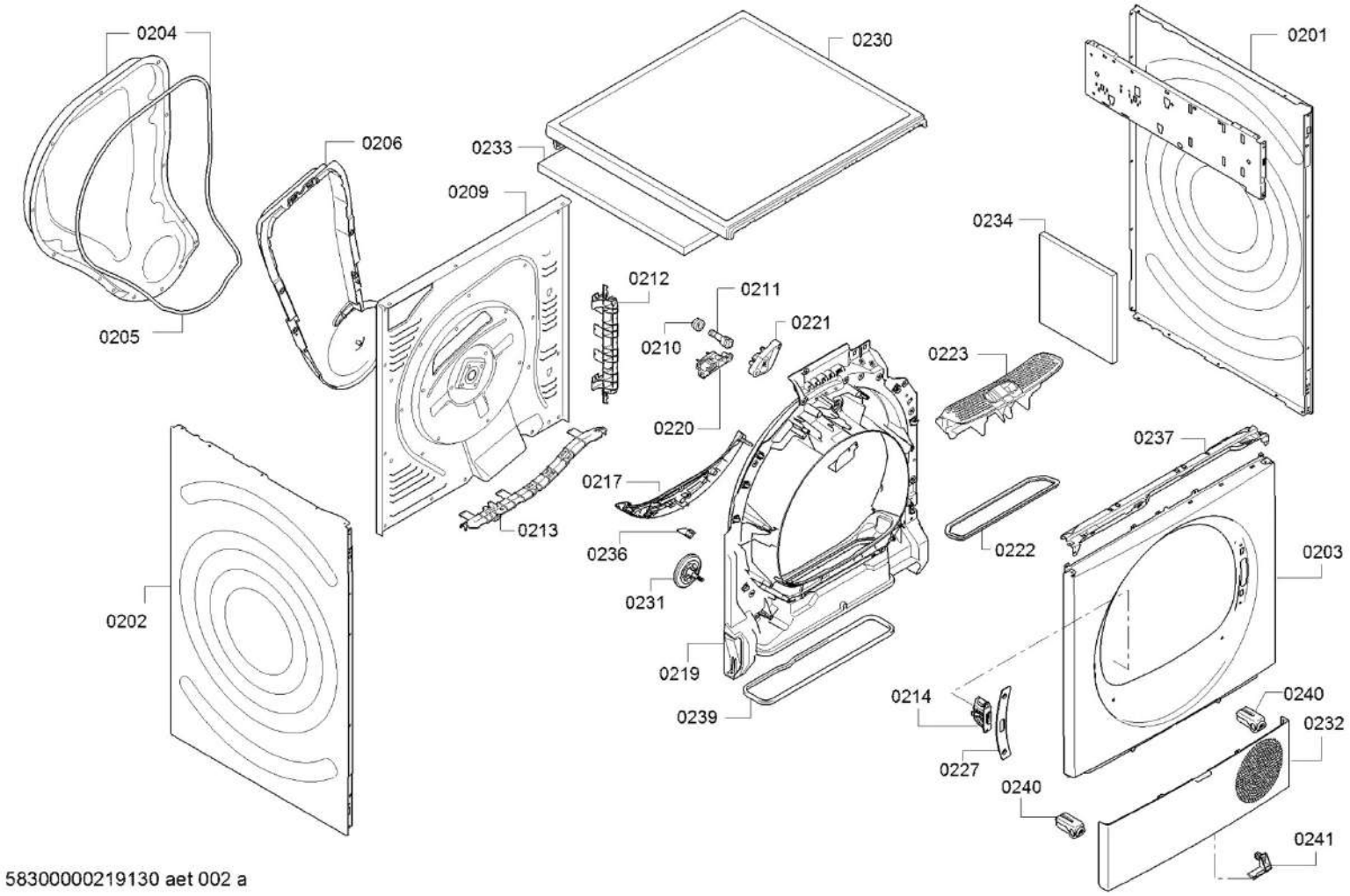

58300000219130 aet 002 a

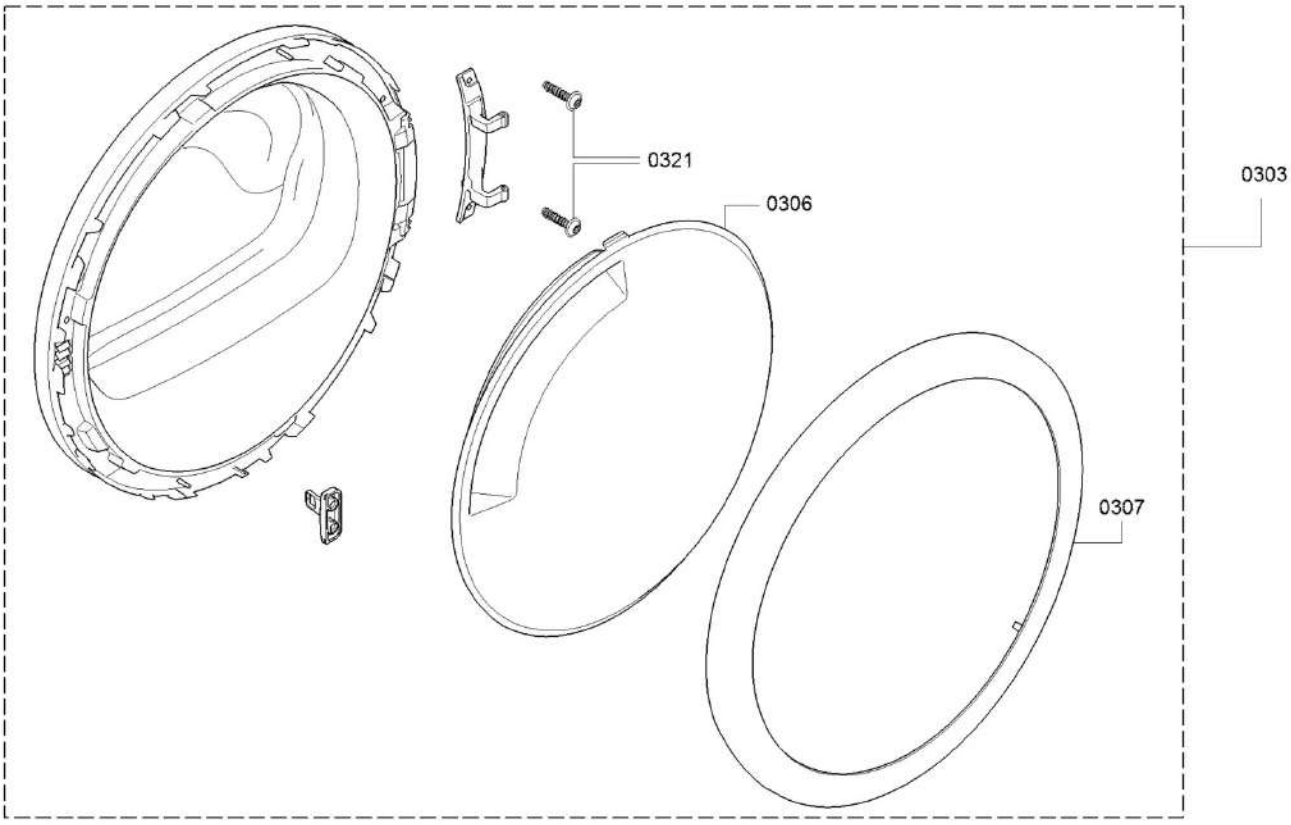

58300000194251 aet 003 c

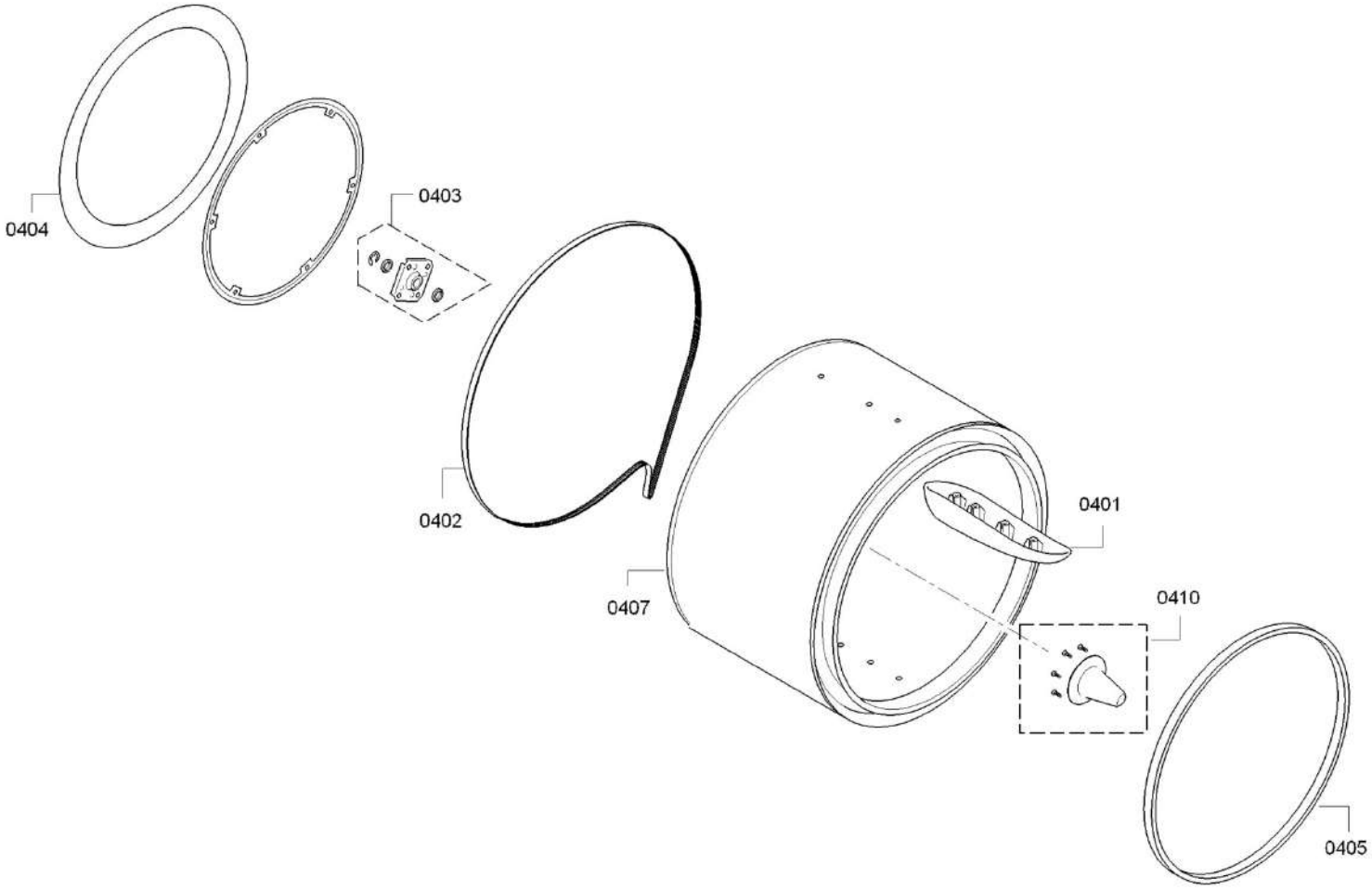

58300000190510 aet 004 a

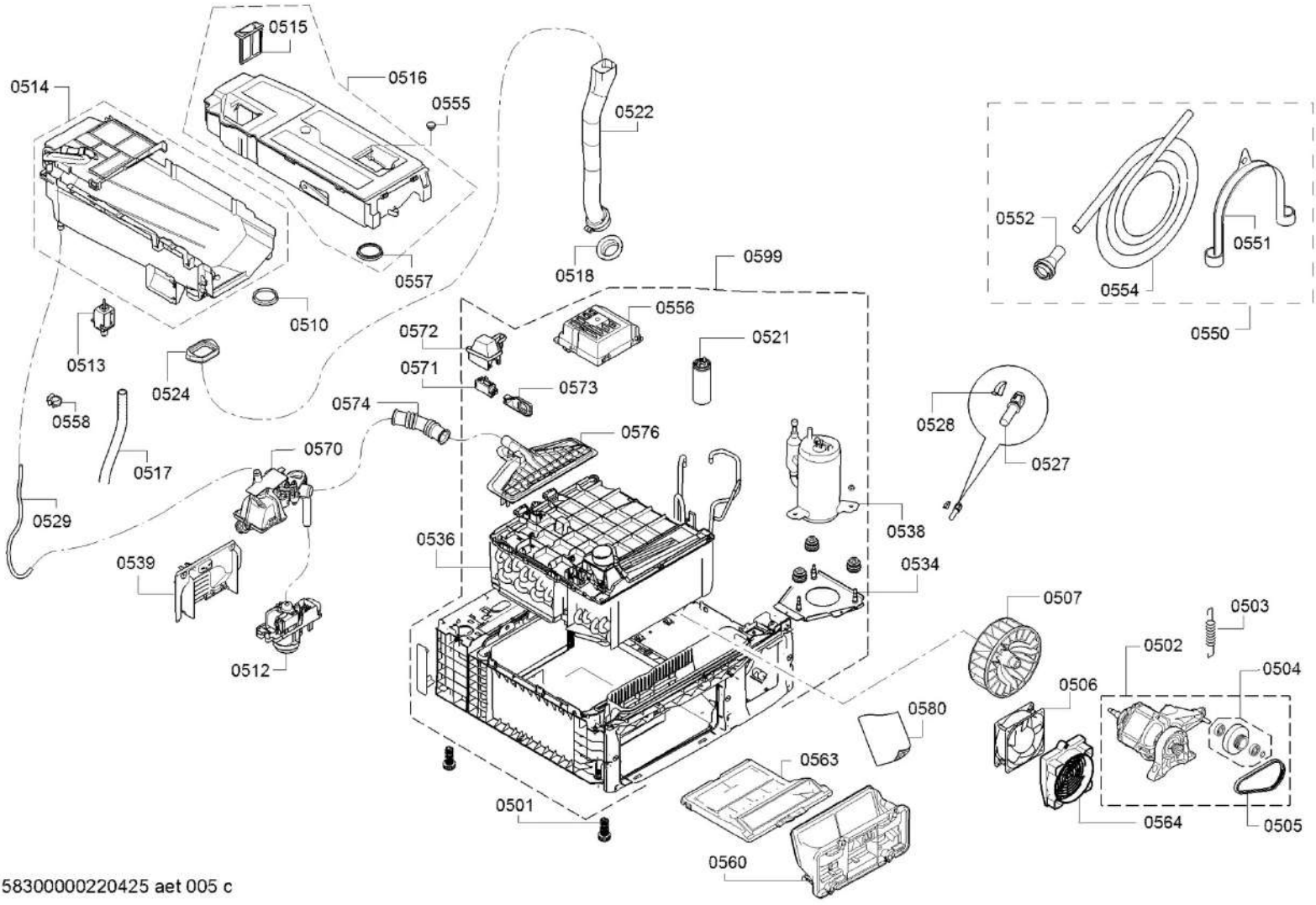

58300000220425 aet 005 c

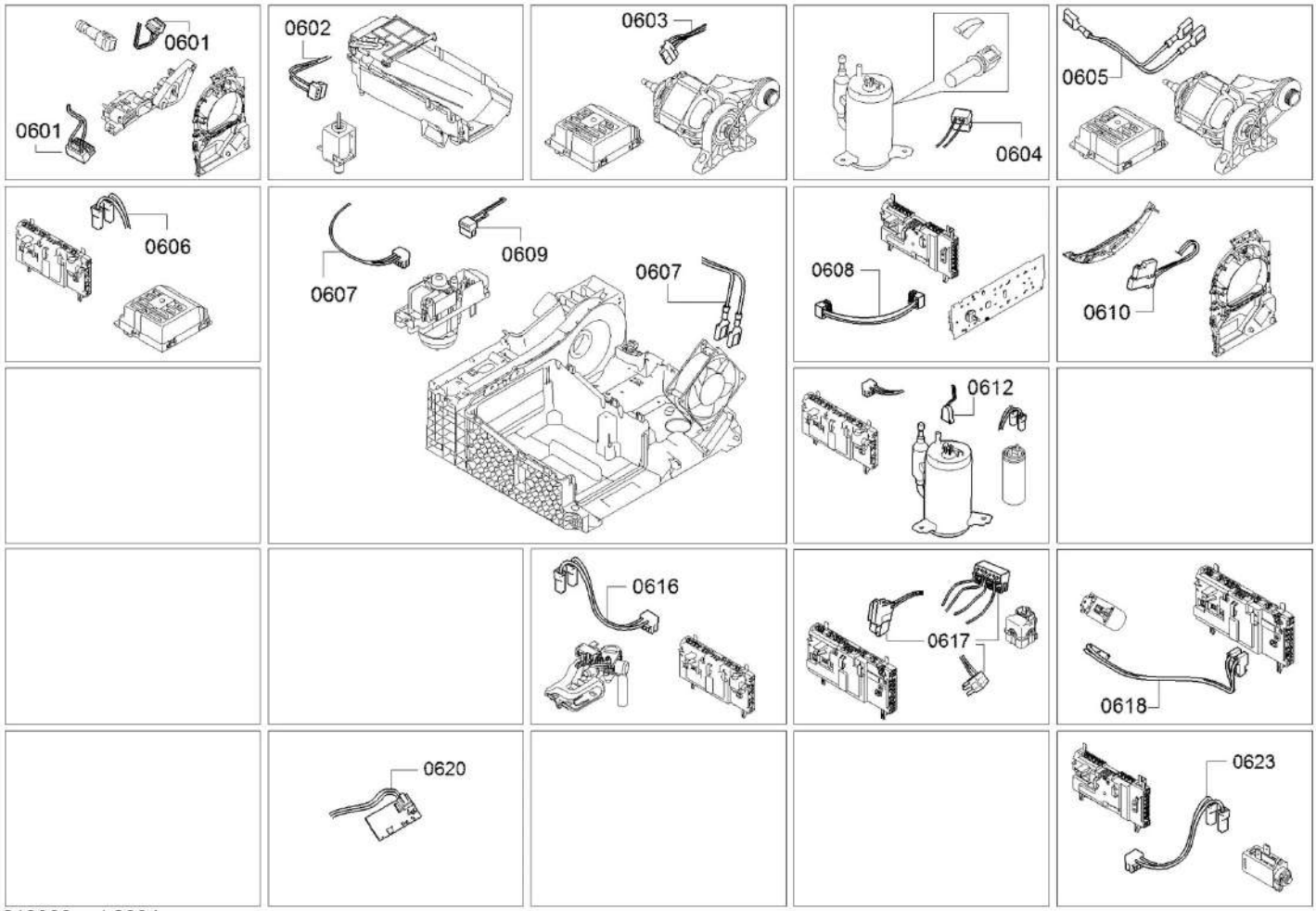

58300000219988 aet 006 b